Autoradio di serie anno 2004 > – OE - Configurazioni

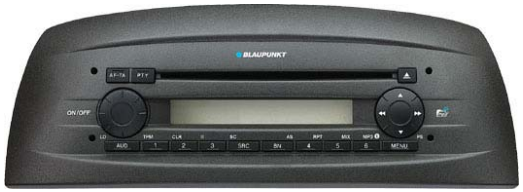





Cosa posso fare per implementare l’impianto car Hifi esistente di serie sulle vetture ?







Alcuni esempi di autoradio Blaupunkt
Installate su vetture gruppo Fiat

CM- AS / ASA -ES -GC | 28/02/2008 | © Blaupunkt GmbH 2008. All rights reserved, also regarding any disposal, exploitation, reproduction, editing, distribution, as well as in the event of applications for industrial property rights.

BLAUPUNKT
Bosch Group

Autoradio di serie anno 2004 > - OE - Bluetooth - iPod



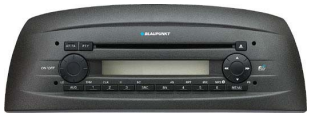









Alcuni esempi di autoradio Blaupunkt
Installate su vetture gruppo Fiat

*

Interfaccia Bluetooth : 7607 545 500

ulteriore cavetto adattatore (Pag.3) per Fiat Multipla e Alfa 147,156 : 8 604 492 573



-Connessione Bluetooth con telefoni cellulari supportati
-ingresso USB x dispositivi audio

*

Interfaccia iPod codice: 7607 540 521

Connessione con iPod indicati sulla confezione



*

nel display dell' autoradio non viene visualizzato:brano,artista …..,ma solo traccia o cd

Fig.1

CM- AS / ASA -ES -GC | 28/02/2008 | © Blaupunkt GmbH 2008. All rights reserved, also regarding any disposal, exploitation, reproduction, editing, distribution, as well as in the event of applications for industrial property rights.

BLAUPUNKT
Bosch Group

Bluetooth - configurazione – Fiat Multipla- Alfa 147 - 156

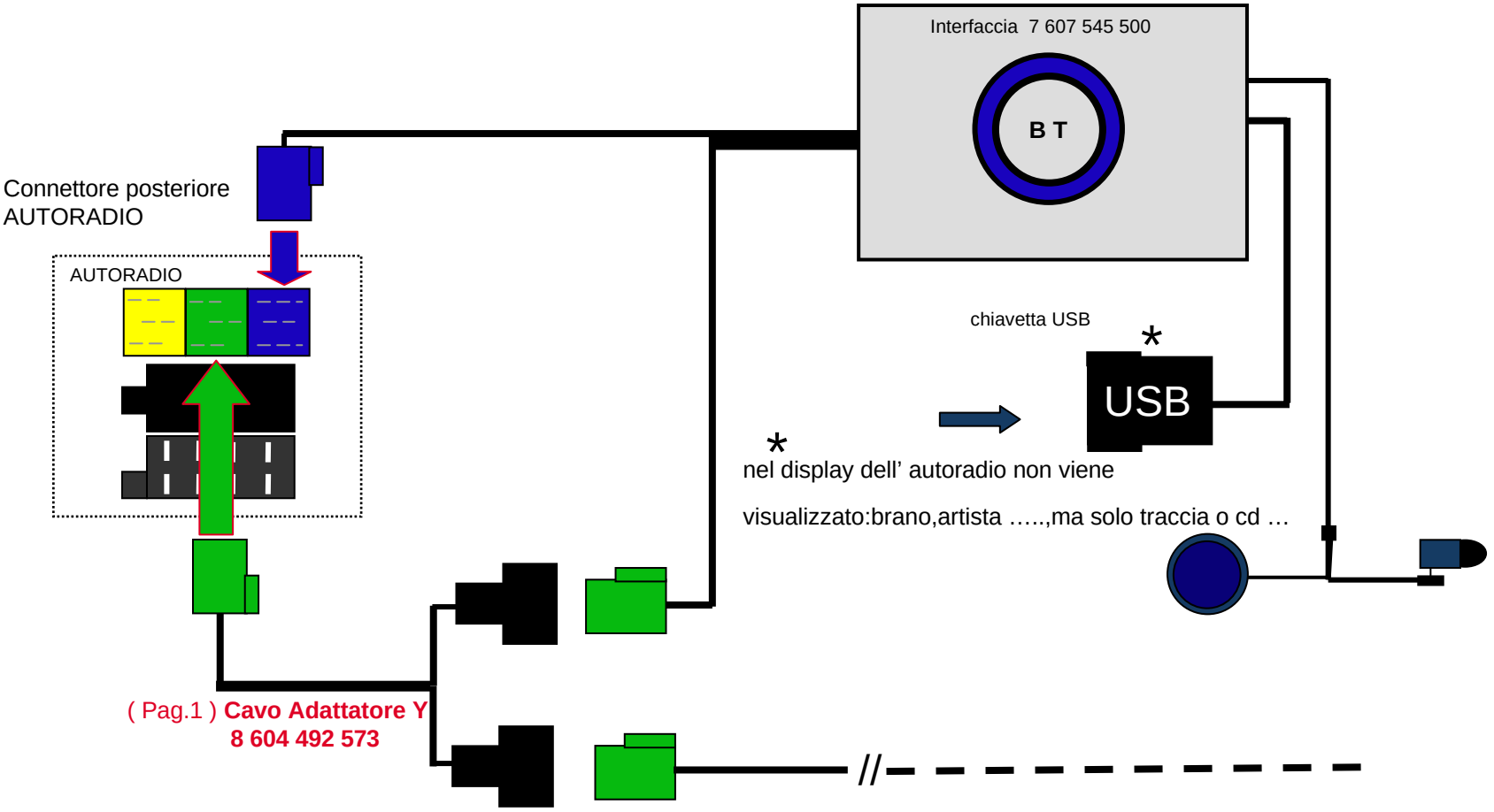

Fig.1

CM- AS / ASA -ES -GC | 28/02/2008 | © Blaupunkt GmbH 2008. All rights reserved, also regarding any disposal, exploitation, reproduction, editing, distribution, as well as in the event of applications for industrial property rights.

BLAUPUNKT
Bosch Group

Autoradio di serie – OE – Amplificatore T H A PnP

Connettore posteriore autoradio

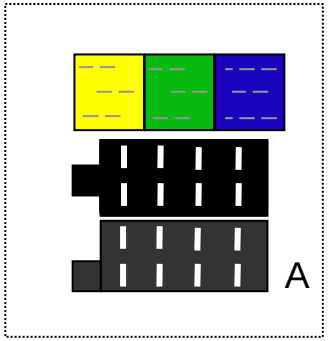

Cavo adattatore 7607 622 015 (in questo esempio) Tipologia : Iso <> Iso.

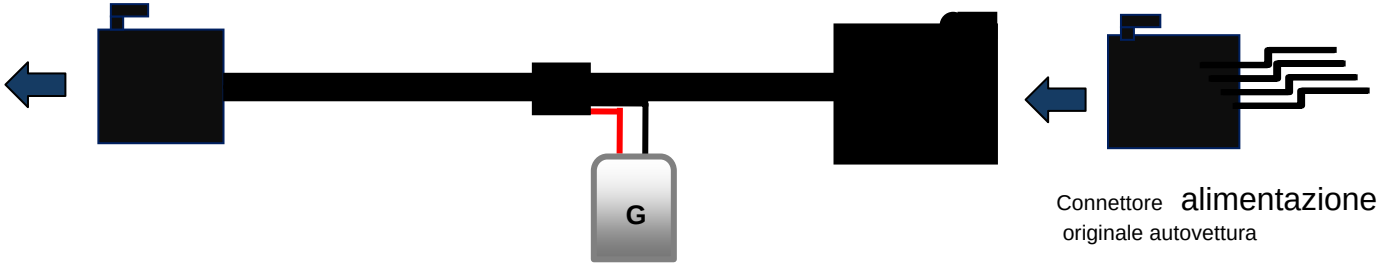

Connettore originale autovettura alimentazione

Per autovetture:
Alfa Romeo
Audi
Citroen
Peugeot
Porsche
Renault
Rover
Saab
Seat
Skoda
Toyota
Daihtsu

Fig.2

CM- AS / ASA -ES -GC | 28/02/2008 | © Blaupunkt GmbH 2008. All rights reserved, also regarding any disposal, exploitation, reproduction, editing, distribution, as well as in the event of applications for industrial property rights.

BLAUPUNKT
Bosch Group

Autoradio di serie – OE – Amplificatore T H A PnP

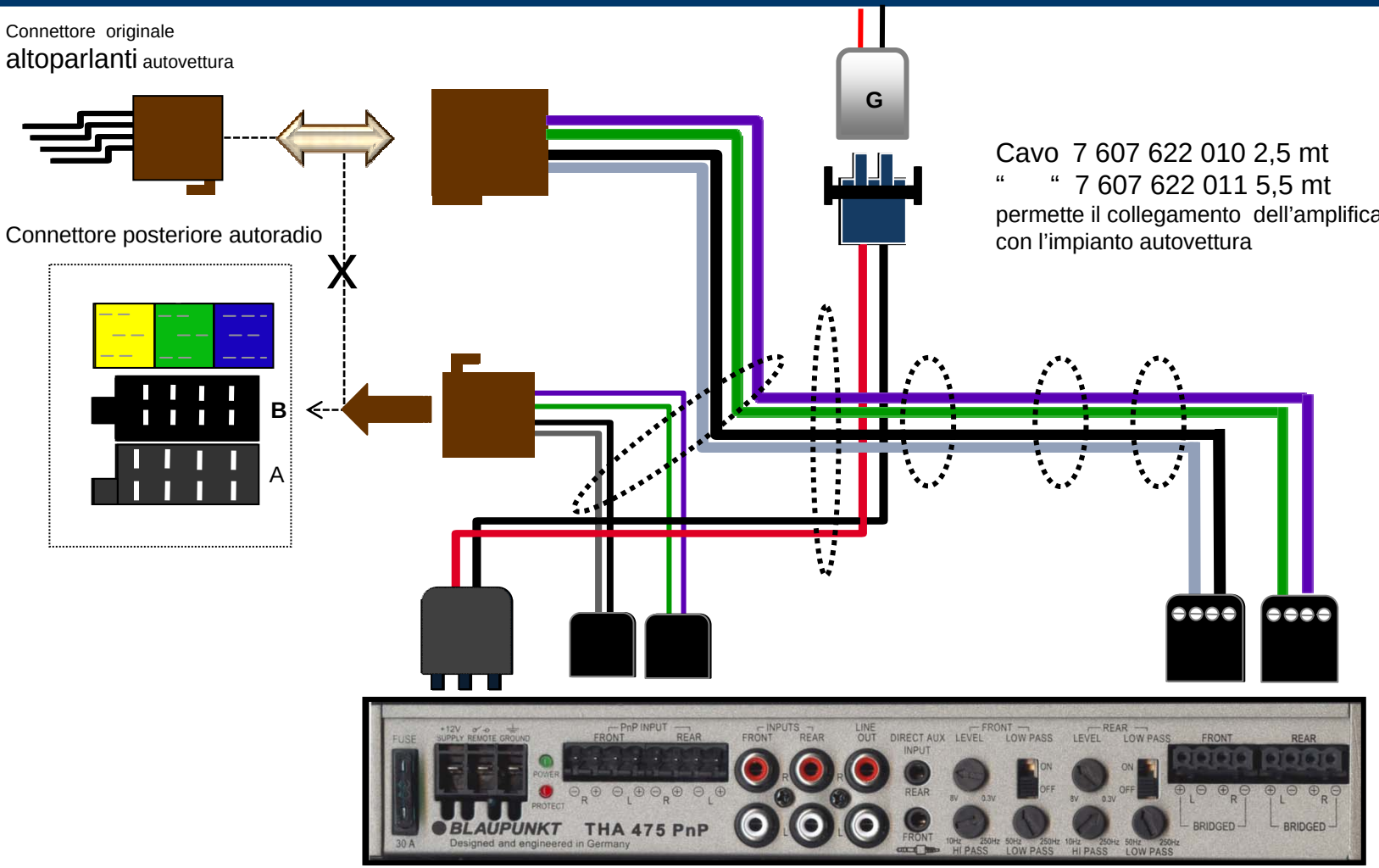

Fig.3

CM- AS / ASA -ES -GC | 28/02/2008 | © Blaupunkt GmbH 2008. All rights reserved, also regarding any disposal, exploitation, reproduction, editing, distribution, as well as in the event of applications for industrial property rights.

BLAUPUNKT
Bosch Group

Autoradio di serie – OE – Amplificatore T H A PnP

Connettore originale
altoparlanti autovettura

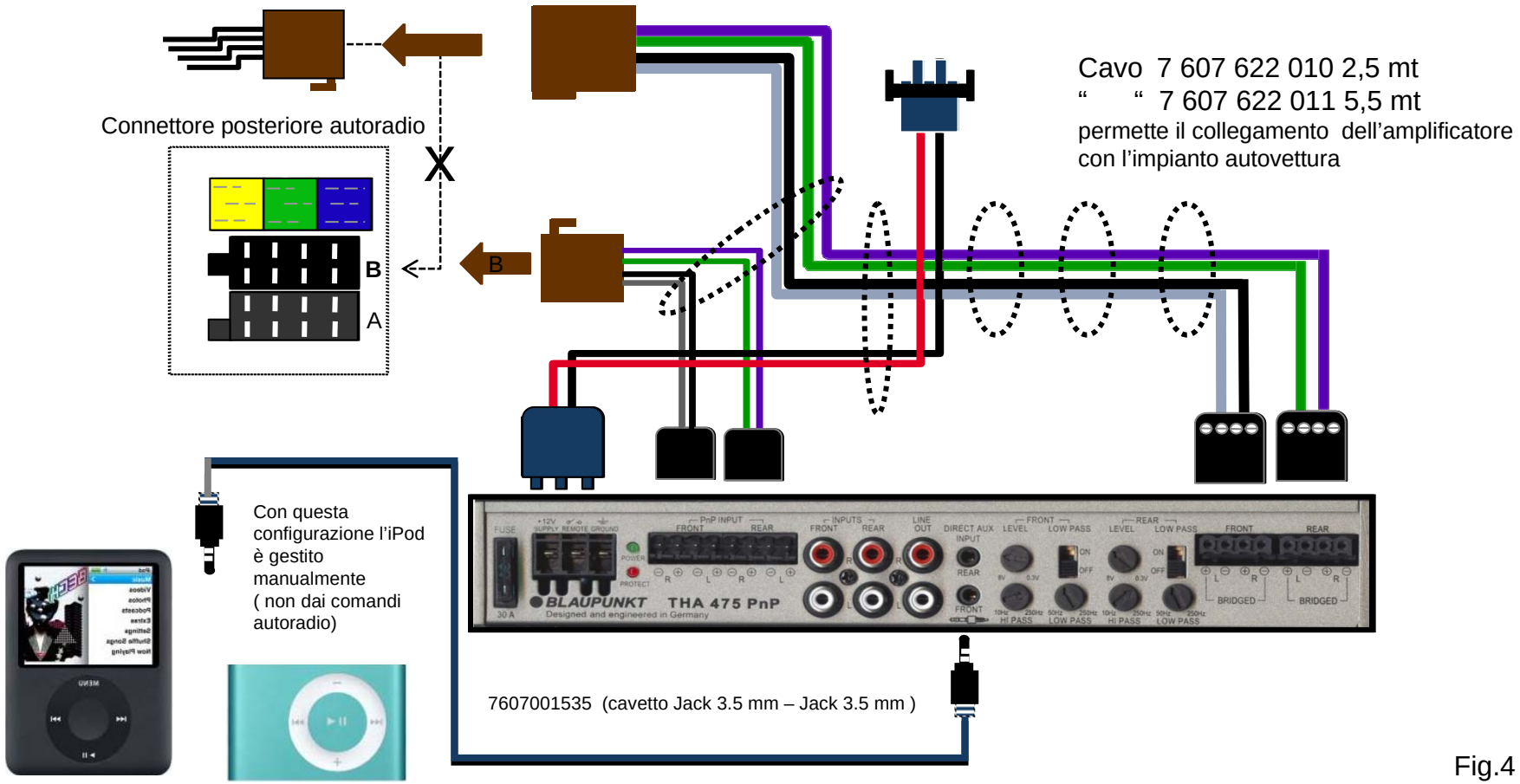

Fig.4

CM- AS / ASA -ES -GC | 28/02/2008 | © Blaupunkt GmbH 2008. All rights reserved, also regarding any disposal, exploitation, reproduction, editing, distribution, as well as in the event of applications for industrial property rights.

BLAUPUNKT
Bosch Group